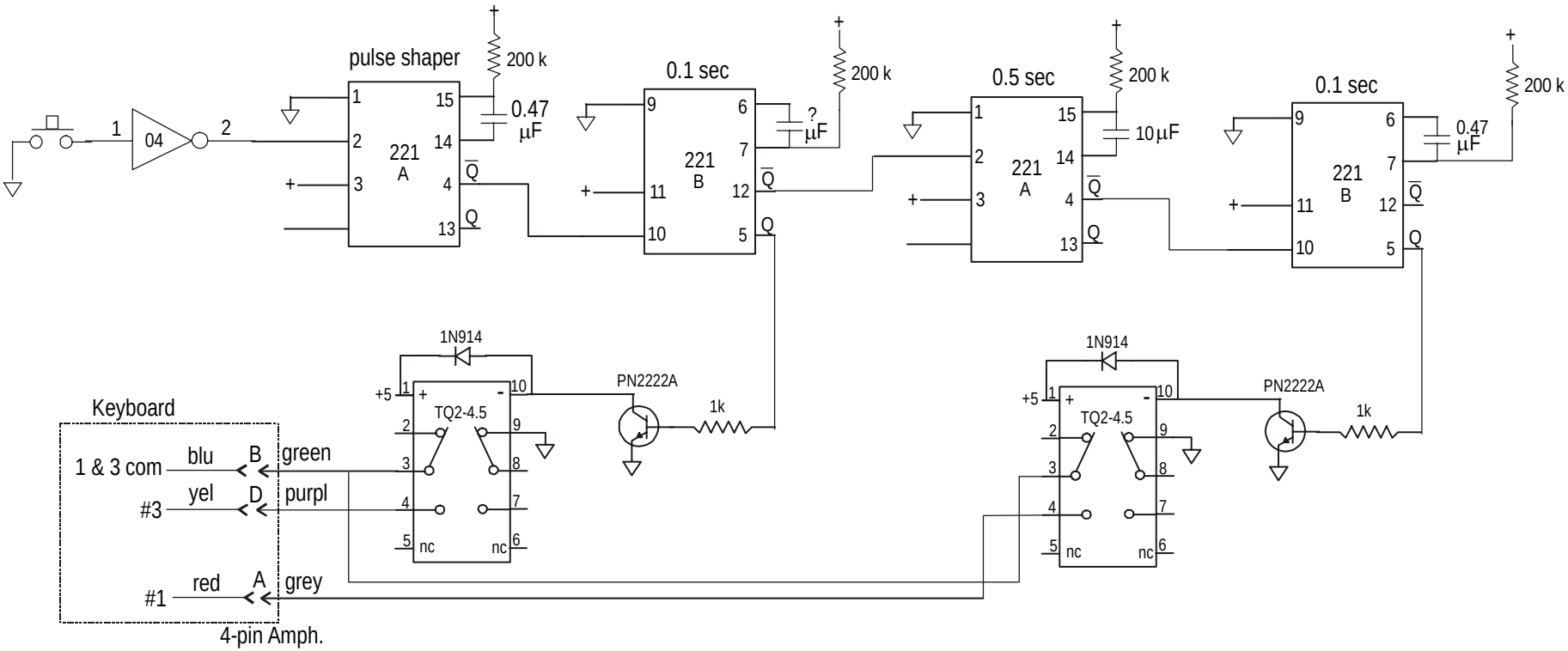

Single button control for marking SLO video
GT Timberlake
2/06